Work Order ID 48365

Friday, June 26, 2009 9:15:50 AM

Item ID: D350-591-311
Revision ID: B
Item Name: Heli-Access-Step, Long LH

Accept

Setup Start
Stop

Start Date: 7/15/2009 **Start Qty:** 10.00
Required Date: 8/3/2009 **Req'd Qty:** 10.00
Reference:

Cust Item ID:
Customer:

Run Start
Stop

Approvals: **Process Plan:** _____ **Date:** _____ **Tooling:** _____ **Date:** _____
QC: _____ **Date:** _____ **SPC (Y/N):** _____ **Date:** _____

Draw Nbr	Revision Nbr
D3272	Rev B

Sequence ID/ Work Center ID	Operation Description	Set Up/ Run Hours	Draw Number	Draw Rev.	Plan Code	Accept Qty	Reject Qty	Reject Number	Insp. Stamp
100	DOCUMENT CONTROL	0.00							
DC	Memo	0.00							
Document Control	Photocopy bluefile and type labels as per PPP D350-591-311 CHG001		S 07/08/25						
110	Large Fab	0.00							
Large Fab	Memo	0.00				10			
Large Fab	1-Bevel end for welding FWD ONLY□2-Weld Support using Jig DT8719, weld Fwd End Plate as per QSI 004 & Dwg D3272□A/RAluminum Rod M110972 M111494 □3-Grind End Plate flush		09.08.04						
120	QC9- Inspect visual per QSI004- Fusion Welds	0.00							
QC	Memo	0.00				10			
Quality Control			~~0908-13~~ 09-08-18						

Work Order ID 48365

Friday, June 26, 2009 9:15:50 AM

Item ID: D350-591-311
Revision ID: B
Item Name: Heli-Access-Step, Long LH

Accept

Setup Start
Stop

Start Date: 7/15/2009 **Start Qty:** 10.00
Required Date: 8/3/2009 **Req'd Qty:** 10.00
Reference:

Cust Item ID:
Customer:

Run Start
Stop

Approvals: **Process Plan:** _____ **Date:** _____ **Tooling:** _____ **Date:** _____
QC: _____ **Date:** _____ **SPC (Y/N):** _____ **Date:** _____

Sequence ID/ Work Center ID	Operation Description	Set Up/ Run Hours	Draw Number	Draw Rev.	Plan Code	Accept Qty	Reject Qty	Reject Number	Insp. Stamp
130 QC Quality Control	QC5- Inspect part completeness to step on W/O Memo	0.00 0.00	2) ~~[illegible]~~ 8/09/09/18			4/104	0		
140 HandFinish Hand Finishing	Chemical Conversion Coat per QSI005 4.1 Memo	0.00 0.00	SAD 09-08-18			10c			
150 QC Quality Control	QC3- Inspect Part Finish Memo	0.00 0.00	09.08.18			10			

Work Order ID 48365

Friday, June 26, 2009 9:15:50 AM

Item ID: D350-591-311 **Accept** **Setup Start** **Stop**

Revision ID: B

Item Name: Heli-Access-Step, Long LH

Start Date: 7/15/2009 **Start Qty:** 10.00 **Cust Item ID:**

Required Date: 8/3/2009 **Req'd Qty:** 10.00 **Customer:**

Reference:

Run Start **Stop**

Approvals: **Process Plan:** _____ **Date:** _____ **Tooling:** _____ **Date:** _____

QC: _____ **Date:** _____ **SPC (Y/N):** _____ **Date:** _____

Sequence ID/ Work Center ID	Operation Description	Set Up/ Run Hours	Draw Number	Draw Rev.	Plan Code	Accept Qty	Reject Qty	Reject Number	Insp. Stamp
160		0.00							
Large Fab	Large Fab								
Large Fab	**Memo**	0.00	SAD 09-08-19			10X			
Large Fab	Assemble Leg Assembly as per Dwg D3272. ☐Leave one rivet out until welding is complete.								
170	QC5- Inspect part completeness to step on W/O	0.00	=> S 09/08/19						
QC	**Memo**	0.00				#1044			
Quality Control									
180		0.00							
Large Fab	Large Fab					10			
Large Fab	**Memo**	0.00							
Large Fab	1-Bevel Aft end for welding☐2-Inspect for foreign object as per QSI 024☐3-Weld Aft End Plate as per QSI 004 & Dwg D3272☐A/RAluminum Rod M110130 ☐4-Grind End Plate flush ☐5-Install last rivet as per Dwg. M111311								

P18 =>

09.08.20

Dart Aerospace Ltd

W/O:		WORK ORDER CHANGES					
DATE	STEP	PROCEDURE CHANGE	By	Date	Qty	Approval Chief Eng / Prod Mgr	Approval QC Inspector

Part No: D350-591-311 CHG001 PAR #: _____ Fault Category: Large fab NCR: (Yes) No DQA: [illegible] Date: 09-08-21

Resolution: Re-work Disposition: Re-work. QA: N/C Closed: [illegible] Date: 09-08-28

NCR: 48365		WORK ORDER NON-CONFORMANCE (NCR)						
DATE	STEP	Description of NC Section A	Corrective Action Section B: Initial Chief Eng	Action Description Chief Eng	Sign & Date	Verification Section C	Approval Chief Eng	Approval QC Inspector
9/8/19	#160	During assembly it was found on one (Qty x1) step leg assembly that the last hole on one side was water jetted too ~~height~~ high. D3065-041	QS1042	- dis-assemble & replace the D3065-5 Qty 1 B - and rivets MS20470AD4-4 M ____ Qty ____	[illegible]	09/08/19	QS1042	09/08/19
		R.C. ~~Bac~~ machine malfuction only on one part. wasn't seen at inspection of w/o 46333 D3065-5	QS1042	Reinspect Fill the affected hole with weld per QS1004, & grind flush. Touch-up with Alodine per QS1005. Rod # M110130SA0 - Transfer drill per D3066-1 spacer 09-08-19	09.08.19	09/08/19	QS1042	09/08/19

NOTE: Date & initial all entries

H:\fFORMS\Quality Assurance\approved QA\NCRWO RevE

Work Order ID 48365

Friday, June 26, 2009 9:15:50 AM

Item ID: D350-591-311
Revision ID: B
Item Name: Heli-Access-Step, Long LH
Start Date: 7/15/2009 **Start Qty:** 10.00
Required Date: 8/3/2009 **Req'd Qty:** 10.00
Reference:

Accept

Setup Start
Stop

Cust Item ID:
Customer:

Run Start
Stop

Approvals: **Process Plan:** _____ **Date:** _____ **Tooling:** _____ **Date:** _____
QC: _____ **Date:** _____ **SPC (Y/N):** _____ **Date:** _____

Sequence ID/ Work Center ID	Operation Description	Set Up/ Run Hours	Draw Number	Draw Rev.	Plan Code	Accept Qty	Reject Qty	Reject Number	Insp. Stamp
190	QC9- Inspect visual per QSI004- Fusion Welds	0.00							
QC	Memo	0.00	DD	09-08-20					
Quality Control									
200	QC5- Inspect part completeness to step on W/O	0.00							
QC	Memo	0.00	27 S 09/08/20			X/OLH	ϕ		
Quality Control									
210	Chemical Conversion Coat per QSI005 4.1	0.00							
HandFinish	Memo	0.00	=> MI 09/08/20			10LH	ϕ		
Hand Finishing									

Work Order ID 48365

Friday, June 26, 2009 9:15:50 AM

Item ID: D350-591-311 **Accept** **Setup Start** **Stop**

Revision ID: B

Item Name: Heli-Access-Step, Long LH

Start Date: 7/15/2009 **Start Qty:** 10.00 **Cust Item ID:**

Required Date: 8/3/2009 **Req'd Qty:** 10.00 **Customer:**

Reference:

Run Start **Stop**

Approvals: **Process Plan:** _____ **Date:** _____ **Tooling:** _____ **Date:** _____

QC: _____ **Date:** _____ **SPC (Y/N):** _____ **Date:** _____

Sequence ID/ Work Center ID	Operation Description	Set Up/ Run Hours	Draw Number	Draw Rev.	Plan Code	Accept Qty	Reject Qty	Reject Number	Insp. Stamp
220	White Gloss(Ref:4.3.5.1) per QSI005 4.3-Alum	0.00							
Powdercoat						10	ϕ		
	Memo M112260	0.00							
Powder Coating	START TIME: 8:50AM OVEN TEMPERATURE: 320° 9:25AM FINISH TIME: * pressure-wash => 09/08/20								
230	~~Pressure Wash per QSI005 4.3~~ Wing Walk per Dwg	0.00							
HandFinish						10LH	ϕ		
	Memo M-112106 BR 09-08-24.	0.00 09/08/20				10LH			
Hand Finishing									
240	QC3- Inspect Part Finish	0.00							
QC						NOLH	ϕ		
	Memo	0.00 => 09/09/25							
Quality Control									

Work Order ID 48365

Friday, June 26, 2009 9:15:50 AM

Item ID: D350-591-311
Revision ID: B
Item Name: Heli-Access-Step, Long LH

Accept

Setup Start
Stop

Start Date: 7/15/2009 **Start Qty:** 10.00
Required Date: 8/3/2009 **Req'd Qty:** 10.00
Reference:

Cust Item ID:
Customer:

Run Start
Stop

Approvals: **Process Plan:** _____ **Date:** _____ **Tooling:** _____ **Date:** _____
QC: _____ **Date:** _____ **SPC (Y/N):** _____ **Date:** _____

Sequence ID/ Work Center ID	Operation Description	Set Up/ Run Hours	Draw Number	Draw Rev.	Plan Code	Accept Qty	Reject Qty	Reject Number	Insp. Stamp
250	Pick Kit	0.00				9/8/25	(10x)		SP
Packaging	Memo	0.00							
Packaging									
260	QC4- 100% Inspect kits for completeness	0.00							
QC	Memo	0.00							
Quality Control									
270	Packaging	0.00				9/8/26	(10x)		SP
Packaging	Memo	0.00							
Packaging	Identify and pack for shipping as per PPP D350-591-311☐Location:_____								

=) δ 09/08/25 x104 ϕ

Rev B

Work Order ID 48365

Friday, June 26, 2009 9:15:50 AM

Item ID: D350-591-311
Revision ID: B
Item Name: Heli-Access-Step, Long LH

Accept

Setup Start
Stop

Start Date: 7/15/2009 **Start Qty:** 10.00
Required Date: 8/3/2009 **Req'd Qty:** 10.00
Reference:

Cust Item ID:
Customer:

Run Start
Stop

Approvals: **Process Plan:** _____ **Date:** _____ **Tooling:** _____ **Date:** _____
QC: _____ **Date:** _____ **SPC (Y/N):** _____ **Date:** _____

Sequence ID/ Work Center ID	Operation Description	Set Up/ Run Hours	Draw Number	Draw Rev.	Plan Code	Accept Qty	Reject Qty	Reject Number	Insp. Stamp
280	QC21- Final Inspection - Work Order Release	0.00				09/08/26			
QC Quality Control	**Memo**	0.00							

09.08.26

51104

Picklist Print

Friday, June 26, 2009 9:15:49 AM

Work Order ID: 48365

Parent Item: D350-591-311RevB

Parent Item Name: Heli-Access-Step, Long LH

Comments:

Start Date: 7/15/2009 **Required Date:** 8/3/2009

Start Qty: 10.00 **Required Qty:** 10.00

Component Item ID/ Item Name	Replacement Item ID	Mfg/ Purch	Bin Item	Primary Location	Last Location	Route Seq ID	Unit of Measure	Qty on Hand	Remaining Qty To Pick	Qty Issued	Date Issued	Status
D3067-1RevA End Plate		Manufactured	No			110	Each	0.0000	10.0000	3 ~~[illegible]~~ 48242	09-08-04	
D3272-1RevB Step		Manufactured	No			110	Each	0.0000	10.0000	B50385	09-08-04	
MS21042E5 Nut		Purchased	No			110	Each	0.0000	20.0000	M111636	SD	
D3065-041RevB Step Leg Assembly Hi		Manufactured	No			160	Each	0.0000	10.0000	B48113	SAD 09-08-19	
D3066-1RevB Spacer		Manufactured	No			160	Each	0.0000	20.0000 *	B48414 ~~B47296~~	SAD 09-08-19 ~~09-08-04~~	
D3219-1RevA Plate		Manufactured	No *			160	Each	0.0000	20.0000	B47296	09-08-04	
MS20600-AD4W4 Rivets		Purchased	No			180	Each	0.0000	160.0000	M112082	SAD 09-08-18	
AN3-35A x2 Bolt		Purchased	No			260	Each	0.0000	20.0000	M110467	SD	
AN4-13A x8 Bolt		Purchased	No			260	Each	0.0000	80.0000	M112314	SD	

9/8/25 (10x) SD

Picklist Print

Friday, June 26, 2009 9:15:49 AM

Work Order ID: 48365

Parent Item: D350-591-311RevB

Parent Item Name: Heli-Access-Step, Long LH

Comments:

Start Date: 7/15/2009 **Required Date:** 8/3/2009

Start Qty: 10.00 **Required Qty:** 10.00

Component Item ID/ Item Name	Replacement Item ID	Mfg/ Purch	Bin Item	Primary Location	Last Location	Route Seq ID	Unit of Measure	Qty on Hand	Remaining Qty To Pick	Qty Issued	Date Issued	Status
AN5-36A x2		Purchased	No			260	Each	0.0000	20.0000	M122243		SP
Bolt												
AN960JD10 x4		Purchased	No			260	Each	0.0000	40.0000	M111668		SP
Washer												
AN960JD416 x16		Purchased	No			260	Each	0.0000	160.0000	M111916		SP
Washer												
AN960JD516 x4		Purchased	No			260	Each	0.0000	40.0000	M112083		SP
Washer												
D2230-3RevF x4		Manufactured	No			260	Each	0.0000	40.0000	24x 48384	50306 (16)	SP
Lug												
D2618RevB1 x2		Manufactured	No			260	Each	0.0000	20.0000	B50659		SP
Bushing												
D2856-400RevA x2		Manufactured	~~No~~			260	f	0.0000	6.0000	B46543		SP
Abraison Strip												
D3067-1RevA		Manufactured	No			260	Each	0.0000	10.0000	351104		
End Plate												
D3235-1RevA x2		Manufactured	No			260	Each	0.0000	20.0000	B45398		SP
Mounting Lug										9/8/25 (10x)		SP

Picklist Print

Friday, June 26, 2009 9:15:49 AM

Work Order ID: 48365

Parent Item: D350-591-311RevB

Parent Item Name: Heli-Access-Step, Long LH

Comments:

Start Date: 7/15/2009 **Required Date:** 8/3/2009

Start Qty: 10.00 **Required Qty:** 10.00

Component Item ID/ Item Name	Replacement Item ID	Mfg/ Purch	Bin Item	Primary Location	Last Location	Route Seq ID	Unit of Measure	Qty on Hand	Remaining Qty To Pick	Qty Issued	Date Issued	Status
D3278-041RevC x1 Support Assembly		Manufactured	No			260	Each	0.0000	10.0000	B 47886	Sl	
MS21042L3 x2 Nut		Purchased	No			260	Each	0.0000	20.0000	M111274	Sl	
MS21042L4 x8 Nut		Purchased	No			260	Each	0.0000	80.0000	M110507	Sl	

9/8/25 10K
Sl

Date: Wednesday, 03/06/2009 10:50:02 AM
User: Julie Dawson

Process Sheet

Customer : CC-EUR01 Eurocopter France
Job Number : 48365
Estimate Number : 13560
P.O. Number :
This Issue : 03/06/2009 **S.O. No.** :
Prsht Rev. : NC
First Issue : / / **Type** : LARGE FAB ASSY
Previous Run : 47859
Written By :
Checked & Approved By : JW 09.06.03
Comment : Est Rev:A 04.03.22 New issue KJ/RF
Est Rev:B 07-06-09 Added D3272-1 JLM
Est. returned to CHG001 for Eurocopter, ref NCR08-082 LL verifed by:EC

Drawing Name : LONG STEP ASSEMBLY HIGH SKID LH
Part Number : D350591311
Drawing Number : D3272 REVB-EUROCOPTR
Project Number : N/A
Drawing Revision : B
Material :
Due Date : 26/06/2009 **Qty:** 10 **Um:** Each

Additional Product

Job Number:

Seq. #:		Machine Or Operation:	Description :
1.0	✓	DC	DOCUMENT CONTROL
		Comment: DOCUMENT CONTROL Photocopy bluefile and type labels as per PPP D350-591-311 CHG001	
2.0	✓	D32721	Step
		Comment: Qty.: 1.0000 Each(s)/Unit Total : 10.0000 Each(s) STEP BATCH:_____	
3.0	✓	D30671	End Plate
		Comment: Qty.: 1.0000 Each(s)/Unit Total : 10.0000 Each(s) Pick: Qty Part Number Description Batch 1 D3067-1 End Plate _____	
4.0	✓	D32191	Plate
		Comment: Qty.: 2.0000 Each(s)/Unit Total : 20.0000 Each(s) Pick: Qty Part Number Description Batch 2 D3219-1 Support _____	

Dart Aerospace Ltd

W/O:		WORK ORDER CHANGES					
DATE	STEP	PROCEDURE CHANGE	By	Date	Qty	Approval Chief Eng / Prod Mgr	Approval QC Inspector

Part No: _____ **PAR #:** _____ **Fault Category:** _____ **NCR:** Yes No **DQA:** _____ **Date:** _____

Resolution: _____ **Disposition:** _____ **QA: N/C Closed:** _____ **Date:** _____

NCR:		WORK ORDER NON-CONFORMANCE (NCR)						
DATE	STEP	Description of NC Section A	Corrective Action Section B			Verification Section C	Approval Chief Eng	Approval QC Inspector
			Initial Chief Eng	Action Description Chief Eng	Sign & Date			

NOTE: Date & initial all entries

H:\fFORMS\Quality Assurance\approved QA\NCRWO RevE

Date: Wednesday, 03/06/2009 10:50:02 AM
User: Julie Dawson

Process Sheet

Customer: CC-EUR01 Eurocopter France **Drawing Name:** LONG STEP ASSEMBLY HIGH SKID LH

Job Number: 48365 **Part Number:** D350591311

Job Number:

Seq. #:	Machine Or Operation:	Description :
5.0	LARGE FAB 1	LARGE FABRICATION RESOURCE 1

Comment: LARGE FABRICATION RESOURCE 1

1-Bevel end for welding FWD ONLY

2-Weld Support using Jig DT8719, weld Fwd End Plate as per QSI 004 & Dwg D3272
A/R Aluminum Rod _____

3-Grind End Plate flush

6.0	QC9	VISUAL WELDING INSPECTION

Comment: VISUAL WELDING INSPECTION

7.0	QC5	INSPECT WORK TO CURRENT STEP

Comment: INSPECT WORK TO CURRENT STEP

8.0	HAND FINISHING1	HAND FINISHING RESOURCE #1

Comment: HAND FINISHING RESOURCE #1
Chemical Conversion Coat as per QSI 005 4.1

9.0	QC3	INSPECT POWDER COAT/CHEMICAL CONVERSION

Comment: INSPECT POWDER COAT/CHEMICAL CONVERSION

10.0	D3065041	Step Leg Assembly Hi

Comment: Qty.: 1.0000 Each(s)/Unit Total : 10.0000 Each(s)
Pick:

Qty	Part Number	Description	Batch
1	D3065-041	Step Leg Assy	_____

11.0	D30661	Spacer

Comment: Qty.: 2.0000 Each(s)/Unit Total : 20.0000 Each(s)
Pick:

Qty	Part Number	Description	Batch
2	D3066-1	Spacer	_____

Form: rprocess

Dart Aerospace Ltd

W/O:		WORK ORDER CHANGES					
DATE	STEP	PROCEDURE CHANGE	By	Date	Qty	Approval Chief Eng / Prod Mgr	Approval QC Inspector

Part No: _____ **PAR #:** _____ **Fault Category:** _____ **NCR:** Yes No **DQA:** _____ **Date:** _____

Resolution: _____ **Disposition:** _____ **QA: N/C Closed:** _____ **Date:** _____

NCR:		WORK ORDER NON-CONFORMANCE (NCR)						
DATE	STEP	Description of NC Section A	Corrective Action Section B			Verification Section C	Approval Chief Eng	Approval QC Inspector
			Initial Chief Eng	Action Description Chief Eng	Sign & Date			

NOTE: Date & initial all entries

H:\fFORMS\Quality Assurance\approved QA\NCRWO RevE

Date: Wednesday, 03/06/2009 10:50:02 AM
User: Julie Dawson

Process Sheet

Customer: CC-EUR01 Eurocopter France **Drawing Name:** LONG STEP ASSEMBLY HIGH SKID LH

Job Number: 48365 **Part Number:** D350591311

Job Number:

Seq. #:	Machine Or Operation:	Description :
12.0	MS20600AD4W4	Rivets

Comment: Qty.: 16.0000 Each(s)/Unit Total : 160.0000 Each(s)
Pick:

Qty	Part Number	Description	Batch
16	MS20600AD4W4	Rivet	_____

13.0	LARGE FAB 1	LARGE FABRICATION RESOURCE 1

Comment: LARGE FABRICATION RESOURCE 1
Assemble Leg Assembly as per Dwg D3272.
Leave one rivet out until welding is complete.

14.0	QC5	INSPECT WORK TO CURRENT STEP

Comment: INSPECT WORK TO CURRENT STEP

15.0	D30671	End Plate

Comment: Qty.: 1.0000 Each(s)/Unit Total : 10.0000 Each(s)
Pick:

Qty	Part Number	Description	Batch
1	D3067-1	End Plate	_____

16.0	LARGE FAB 1	LARGE FABRICATION RESOURCE 1

Comment: LARGE FABRICATION RESOURCE 1

1-Bevel Aft end for welding

2-Inspect for foreign object as per QSI 024

3-Weld Aft End Plate as per QSI 004 & Dwg D3272
A/R Aluminum Rod _____

4-Grind End Plate flush

5-Install last rivet as per Dwg.

Form: rprocess

Dart Aerospace Ltd

W/O:		WORK ORDER CHANGES					
DATE	STEP	PROCEDURE CHANGE	By	Date	Qty	Approval Chief Eng / Prod Mgr	Approval QC Inspector

Part No: _____ **PAR #:** _____ **Fault Category:** _____ **NCR:** Yes No **DQA:** _____ **Date:** _____

Resolution: _____ **Disposition:** _____ **QA: N/C Closed:** _____ **Date:** _____

NCR:		WORK ORDER NON-CONFORMANCE (NCR)						
DATE	STEP	Description of NC Section A	Corrective Action Section B			Verification Section C	Approval Chief Eng	Approval QC Inspector
			Initial Chief Eng	Action Description Chief Eng	Sign & Date			

NOTE: Date & initial all entries

Date: Wednesday, 03/06/2009 10:50:02 AM
User: Julie Dawson

Process Sheet

Customer: CC-EUR01 Eurocopter France **Drawing Name:** LONG STEP ASSEMBLY HIGH SKID LH

Job Number: 48365 **Part Number:** D350591311

Job Number:

Seq. #:	Machine Or Operation:	Description :
17.0	QC9	VISUAL WELDING INSPECTION
	Comment: VISUAL WELDING INSPECTION	
18.0	QC5	INSPECT WORK TO CURRENT STEP
	Comment: INSPECT WORK TO CURRENT STEP	
19.0	HAND FINISHING1	HAND FINISHING RESOURCE #1
	Comment: HAND FINISHING RESOURCE #1 touch up alodine	
20.0	POWDER COATING	POWDER COATING
	Comment: POWDER COATING Powder Coat White Gloss (Ref: 4.3.5.1) as per QSI 005 4.3 START TIME: 8:50AM OVEN TEMPERATURE: 320°F FINISH TIME: 9:25AM	M 112260 09-08-20 XION
21.0	HAND FINISHING1	HAND FINISHING RESOURCE #1
	Comment: HAND FINISHING RESOURCE #1 Wing Walk as per Dwg D3272 and QSI 005 4.4	BR 09-08-24 (10)
22.0	QC3	INSPECT POWDER COAT/CHEMICAL CONVERSION
	Comment: Inspect Powder Coat and Wing Walk	
23.0	PACKAGING 1	PACKAGING RESOURCE #1
	Comment: PACKAGING RESOURCE #1 Pick Packing Kit	
24.0	D22303	Lug
	Comment: Qty.: 4.0000 Each(s)/Unit Total : 40.0000 Each(s) Pick: Packing Kit Qty Part Number Description Batch 4 D2230-3 Mounting Lug _____	

Form: rprocess

Dart Aerospace Ltd

W/O:		WORK ORDER CHANGES					
DATE	STEP	PROCEDURE CHANGE	By	Date	Qty	Approval Chief Eng / Prod Mgr	Approval QC Inspector

Part No: _____ **PAR #:** _____ **Fault Category:** _____ **NCR:** Yes No **DQA:** _____ **Date:** _____

Resolution: _____ **Disposition:** _____ **QA: N/C Closed:** _____ **Date:** _____

NCR:		WORK ORDER NON-CONFORMANCE (NCR)						
DATE	STEP	Description of NC Section A	Corrective Action Section B			Verification Section C	Approval Chief Eng	Approval QC Inspector
			Initial Chief Eng	Action Description Chief Eng	Sign & Date			

NOTE: Date & initial all entries

H:\fFORMS\Quality Assurance\approved QA\NCRWO RevE

Date: Wednesday, 03/06/2009 10:50:02 AM
User: Julie Dawson

Process Sheet

Customer: CC-EUR01 Eurocopter France **Drawing Name:** LONG STEP ASSEMBLY HIGH SKID LH

Job Number: 48365 **Part Number:** D350591311

Job Number:

Seq. #:	Machine Or Operation:	Description :
25.0	D2618	Bushing

Comment: Qty.: 2.0000 Each(s)/Unit Total : 20.0000 Each(s)
Pick: Packing Kit

Qty	Part Number	Description	Batch
2	D2618	Bushing	_____

26.0	D2856400	Abraison Strip

Comment: Qty.: 0.6000 f(s)/Unit Total : 6.0000 f(s)
Abraison Strip
2 x D2856-400-720 _____

27.0	D32351	Mounting Lug

Comment: Qty.: 2.0000 Each(s)/Unit Total : 20.0000 Each(s)
Pick: Packing Kit

Qty	Part Number	Description	Batch
2	D3235-1	Mounting Lug	_____

28.0	D3278041	Support Assembly

Comment: Qty.: 1.0000 Each(s)/Unit Total : 10.0000 Each(s)
Pick: Packing Kit

Qty	Part Number	Description	Batch
1	D3278-041	Support Assembly	_____

29.0	AN335A	Bolt

Comment: Qty.: 2.0000 Each(s)/Unit Total : 20.0000 Each(s)
Pick: Packing Kit

Qty	Part Number	Description	Batch
2	AN3-35A	Bolt	_____

30.0	AN413A	Bolt

Comment: Qty.: 8.0000 Each(s)/Unit Total : 80.0000 Each(s)
Pick: Packing Kit

Qty	Part Number	Description	Batch
8	AN4-13A	Bolt	_____

Form: rprocess

Dart Aerospace Ltd

W/O:		WORK ORDER CHANGES					
DATE	STEP	PROCEDURE CHANGE	By	Date	Qty	Approval Chief Eng / Prod Mgr	Approval QC Inspector

Part No: _____ **PAR #:** _____ **Fault Category:** _____ **NCR:** Yes No **DQA:** _____ **Date:** _____

Resolution: _____ **Disposition:** _____ **QA: N/C Closed:** _____ **Date:** _____

NCR:		WORK ORDER NON-CONFORMANCE (NCR)						
DATE	STEP	Description of NC Section A	Corrective Action Section B			Verification Section C	Approval Chief Eng	Approval QC Inspector
			Initial Chief Eng	Action Description Chief Eng	Sign & Date			

NOTE: Date & initial all entries

H:\fFORMS\Quality Assurance\approved QA\NCRWO RevE

Date: Wednesday, 03/06/2009 10:50:02 AM
User: Julie Dawson

Process Sheet

Customer: CC-EUR01 Eurocopter France **Drawing Name:** LONG STEP ASSEMBLY HIGH SKID LH

Job Number: 48365 **Part Number:** D350591311

Job Number:

Seq. #:	Machine Or Operation:	Description :
31.0	AN536A	Bolt

Comment: Qty.: 2.0000 Each(s)/Unit Total : 20.0000 Each(s)
Pick: Packing Kit

Qty	Part Number	Description	Batch
2	AN5-36A	Bolt	_____

32.0	AN960JD10	Washer

Comment: Qty.: 4.0000 Each(s)/Unit Total : 40.0000 Each(s)
Pick: Packing Kit

Qty	Part Number	Description	Batch
4	AN960JD10	Washer	_____

33.0	AN960JD416	Washer

Comment: Qty.: 16.0000 Each(s)/Unit Total : 160.0000 Each(s)
Pick: Packing Kit

Qty	Part Number	Description	Batch
16	AN960JD416	Washer	_____

34.0	AN960JD516	Washer

Comment: Qty.: 4.0000 Each(s)/Unit Total : 40.0000 Each(s)
Pick: Packing Kit

Qty	Part Number	Description	Batch
4	AN960JD516	Washer	_____

35.0	MS21042L3	Nut

Comment: Qty.: 2.0000 Each(s)/Unit Total : 20.0000 Each(s)
Pick: Packing Kit

Qty	Part Number	Description	Batch
2	MS21042L3	Nut (or -3)	_____

Dart Aerospace Ltd

W/O:		WORK ORDER CHANGES					
DATE	STEP	PROCEDURE CHANGE	By	Date	Qty	Approval Chief Eng / Prod Mgr	Approval QC Inspector

Part No: _____ **PAR #:** _____ **Fault Category:** _____ **NCR:** Yes No **DQA:** _____ **Date:** _____

Resolution: _____ **Disposition:** _____ **QA: N/C Closed:** _____ **Date:** _____

NCR:		WORK ORDER NON-CONFORMANCE (NCR)						
DATE	STEP	Description of NC Section A	Corrective Action Section B			Verification Section C	Approval Chief Eng	Approval QC Inspector
			Initial Chief Eng	Action Description Chief Eng	Sign & Date			

NOTE: Date & initial all entries

H:\fFORMS\Quality Assurance\approved QA\NCRWO RevE

Date: Wednesday, 03/06/2009 10:50:02 AM
User: Julie Dawson

Process Sheet

Customer: CC-EUR01 Eurocopter France
Drawing Name: LONG STEP ASSEMBLY HIGH SKID LH

Job Number: 48365
Part Number: D350591311

Job Number:

Seq. #:	Machine Or Operation:	Description :
36.0	MS21042L4	Nut

Comment: Qty.: 8.0000 Each(s)/Unit Total : 80.0000 Each(s)
Pick: Packing Kit

Qty	Part Number	Description	Batch
8	MS21042L4	Nut (or -4)	_____

37.0	MS21042L5	Nut

Comment: Qty.: 2.0000 Each(s)/Unit Total : 20.0000 Each(s)
Pick: Packing Kit

Qty	Part Number	Description	Batch
2	MS21042L5	Nut (or -5)	_____

38.0	QC4	INSPECT 100% KITS FOR COMPLETENESS

Comment: INSPECT 100% KITS FOR COMPLETENESS

39.0	PACKAGING 1	PACKAGING RESOURCE #1

Comment: PACKAGING RESOURCE #1
Identify and pack for shipping as per PPP D350-591-311
Location:_____

40.0	QC21	FINAL INSPECTION/W/O RELEASE

Comment: FINAL INSPECTION/W/O RELEASE

Job Completion

Form: rprocess

Dart Aerospace Ltd

W/O:		WORK ORDER CHANGES					
DATE	STEP	PROCEDURE CHANGE	By	Date	Qty	Approval Chief Eng / Prod Mgr	Approval QC Inspector

Part No: _____ **PAR #:** _____ **Fault Category:** _____ **NCR:** Yes No **DQA:** _____ **Date:** _____

Resolution: _____ **Disposition:** _____ **QA: N/C Closed:** _____ **Date:** _____

NCR:		WORK ORDER NON-CONFORMANCE (NCR)						
DATE	STEP	Description of NC Section A	Corrective Action Section B			Verification Section C	Approval Chief Eng	Approval QC Inspector
			Initial Chief Eng	Action Description Chief Eng	Sign & Date			

NOTE: Date & initial all entries

H:\fFORMS\Quality Assurance\approved QA\NCRWO RevE

DESIGN	DRAWN BY	DART AEROSPACE LTD HAWKESBURY, ONTARIO, CANADA	
CHECKED	APPROVED	DRAWING NO. D3272	REV. B SHEET 1 OF 3
DATE 07.05.18		TITLE STEP ASSEMBLY, HI LONG	SCALE NTS

A	04.03.01	NEW ISSUE
B	07.05.18	D3272-1 WAS D2622-120

RELEASED
07 06 04

QTY -041	QTY -042	PART NUMBER	DESCRIPTION
X		**D3272-041**	**STEP ASSEMBLY, HIGH LONG (LH)**
	X	**D3272-042**	**STEP ASSEMBLY, HIGH LONG (RH)**
1	1	D3065-041	LEG ASSEMBLY
2	2	D3066-1	SPACER
2	2	D3067-1	END PLATE
2	2	D3219-1	SUPPORT
1	1	D3272-1	STEP
16	16	MS20600AD4W4	RIVET

B

GENERAL NOTES:

1) D3272-041 SHOWN. FOR D3272-042, INSTALL D3219-1 SUPPORT OPPOSITE SIDE
2) WELD PER DART QSI 004
3) FINISH: CHEMICAL CONVERSION COAT PER DART QSI 005.4.1
   POWDER COAT ASSEMBLY WHITE (4.3.5.1) PER DART QSI 005 4.3
   BLACK ANTI-SKID PAINT PER DART QSI 005 4.4
4) TOLERANCES ARE PER DART QSI 018 UNLESS OTHERWISE NOTED.
5) ALL DIMENSIONS ARE IN INCHES UNLESS OTHERWISE NOTED.
6) BREAK ALL SHARP EDGES 0.005 TO 0.010 MAX.

SHOP COPY
RETURN TO
ENGINEERING
UNCONTROLLED COPY
SUBJECT TO AMENDMENT
WITHOUT NOTICE
WORK ORDER
NO. 148365

Copyright © 2004 by DART AEROSPACE LTD
THIS DOCUMENT IS PRIVATE AND CONFIDENTIAL AND IS SUPPLIED ON THE EXPRESS CONDITION THAT IT IS NOT TO BE USED FOR ANY PURPOSE OR COPIED OR COMMUNICATED TO ANY OTHER PERSON WITHOUT WRITTEN PERMISSION FROM DART AEROSPACE LTD.

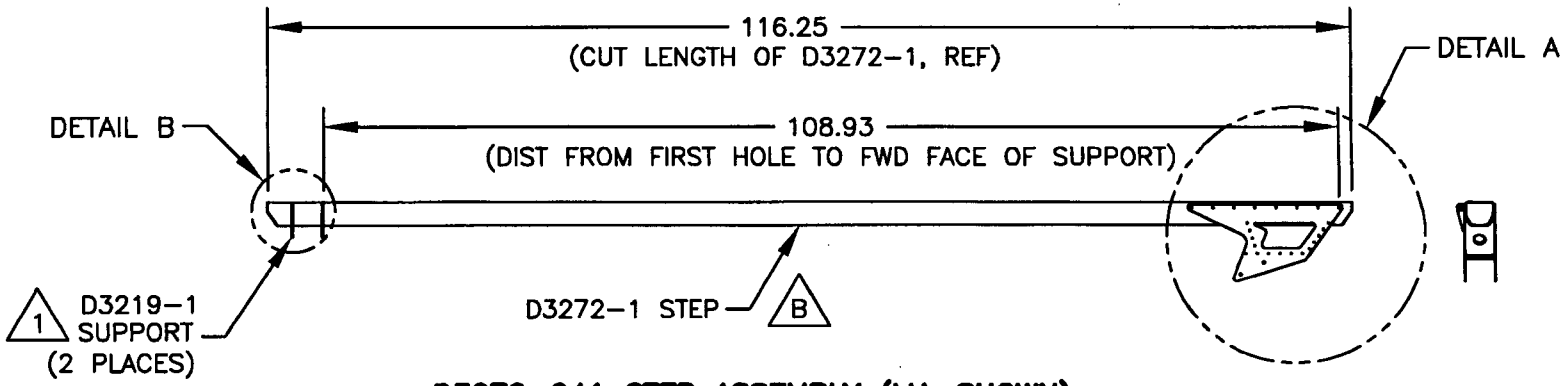

D3272-041 STEP ASSEMBLY (LH, SHOWN)

D3272-042 STEP ASSEMBLY (RH, OPPOSITE)

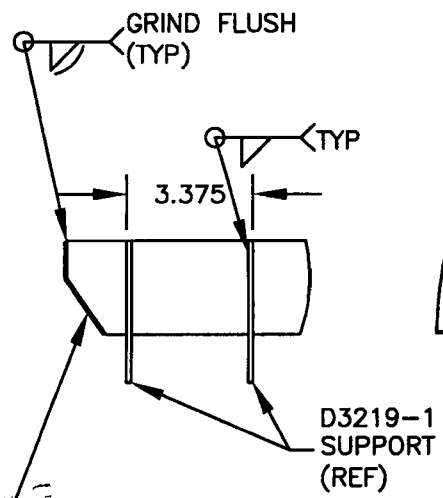

DETAIL B
(SCALE 1:5)

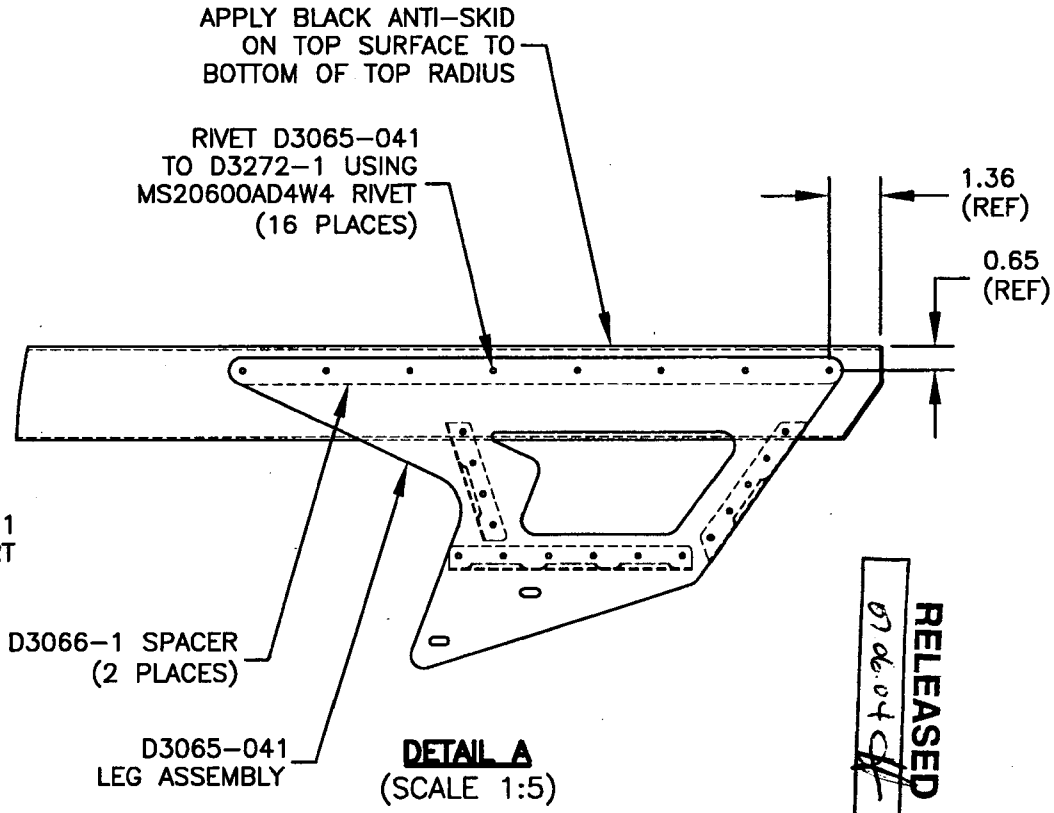

DETAIL A
(SCALE 1:5)

RELEASED
07.06.04

DART

DESIGN	DRAWN BY	DART AEROSPACE LTD HAWKESBURY, ONTARIO, CANADA	
CHECKED	APPROVED	DRAWING NO. D3272	REV. B
DATE 07.05.18		TITLE STEP ASSEMBLY, HI LONG	SHEET 2 OF 3
			SCALE 1:20

Copyright © 2004 by DART AEROSPACE LTD

THIS DOCUMENT IS PRIVATE AND CONFIDENTIAL AND IS SUPPLIED ON THE EXPRESS CONDITION THAT IT IS NOT TO BE USED FOR ANY PURPOSE OR COPIED OR COMMUNICATED TO ANY OTHER PERSON WITHOUT WRITTEN PERMISSION FROM DART AEROSPACE LTD.

UNCONTROLLED COPY
SUBJECT TO AMENDMENT WITHOUT NOTICE
RETURN TO ENGINEERING
WORK SHOP COPY

DESIGN	DRAWN BY	DART AEROSPACE LTD HAWKESBURY, ONTARIO, CANADA	
CHECKED	APPROVED	DRAWING NO. D3272	REV. B SHEET 3 OF 3
DATE 07.05.18		TITLE STEP ASSEMBLY, HI LONG	SCALE 1:20

RELEASED
07.06.04

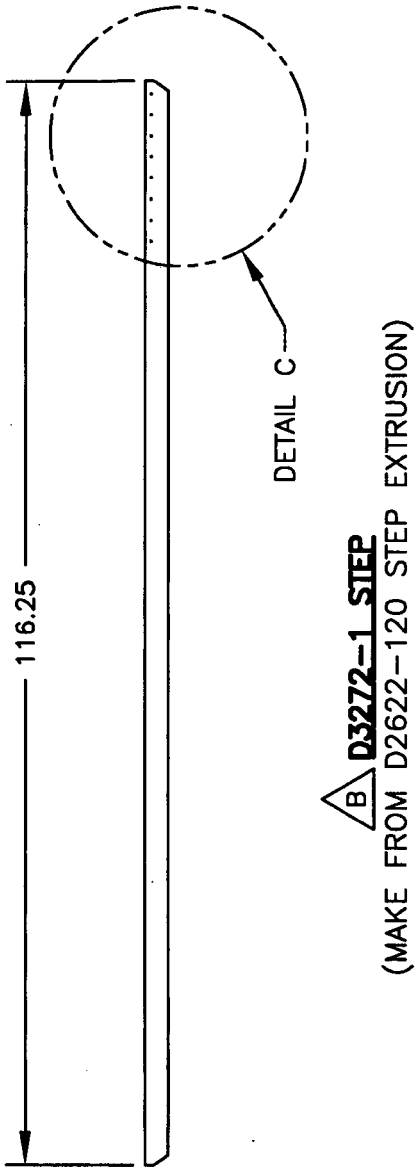

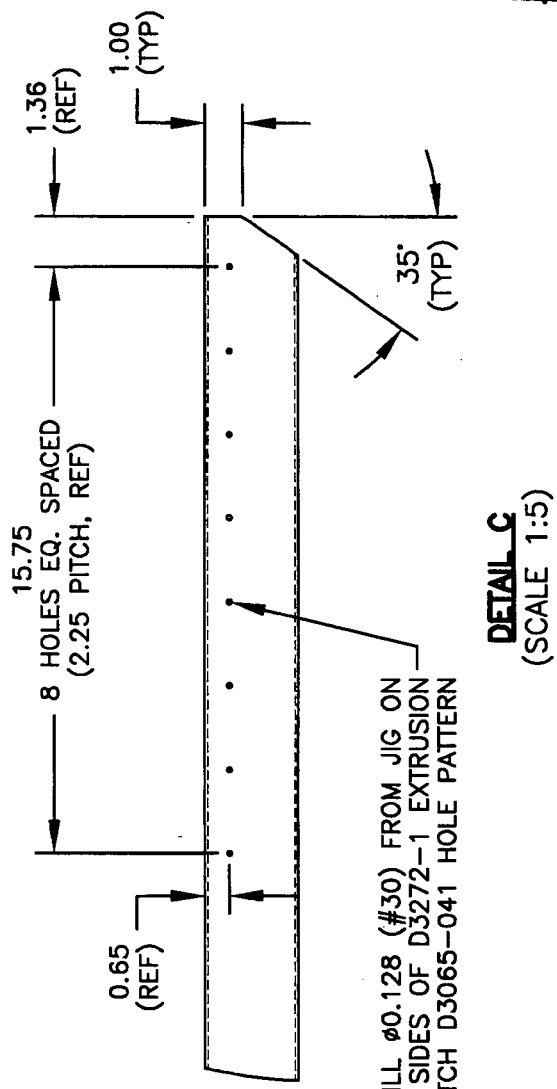

DETAIL C
(SCALE 1:5)

SHOP COPY
RETURN TO
ENGINEERING

UNCONTROLLED COPY
SUBJECT TO AMENDMENT
WITHOUT NOTICE
WORK ORDER
NO. 48365

Copyright © 2004 by DART AEROSPACE LTD
THIS DOCUMENT IS PRIVATE AND CONFIDENTIAL AND IS SUPPLIED ON THE EXPRESS CONDITION THAT IT IS NOT TO BE USED FOR ANY PURPOSE OR COPIED OR COMMUNICATED TO ANY OTHER PERSON WITHOUT WRITTEN PERMISSION FROM DART AEROSPACE LTD.

Qty -211	Qty -212	Qty -213	Qty -214	Qty -215	Qty -216	Qty -311	Qty -312	Part Number	Description
X								D350-591-211	***Heli-Access-Step***™, Long Step – High Skid, LH
	X							D350-591-212	***Heli-Access-Step***™, Long Step – High Skid, RH
		X						D350-591-213	***Heli-Access-Step***™, Short Step – High Skid, LH
			X					D350-591-214	***Heli-Access-Step***™, Short Step – High Skid, RH
				X				D350-591-215	***Heli-Access-Step***™, Short Step – Low Skid, LH
					X			D350-591-216	***Heli-Access-Step***™, Short Step – Low Skid, RH
						X		D350-591-311	***Heli-Access-Step***™, Long Step – High Skid, LH
							X	D350-591-312	***Heli-Access-Step***™, Long Step – High Skid, RH
1								D3070-041	STEP ASSEMBLY (HIGH-LONG, LH)
	1							D3070-042	STEP ASSEMBLY (HIGH-LONG, RH)
		1						D3078-041	STEP ASSEMBLY (HIGH-SHORT, LH)
			1					D3078-042	STEP ASSEMBLY (HIGH-SHORT, RH)
				1				D3168-041	STEP ASSEMBLY (LOW-SHORT, LH)
					1			D3168-042	STEP ASSEMBLY (LOW-SHORT, RH)
						1		D3272-041	STEP ASSEMBLY (HIGH-LONG, LH)
							1	D3272-042	STEP ASSEMBLY (HIGH-LONG, RH)
4	4							D2182B035	RUBBER CUSHION
		2	2	2	2			D2230-1	MOUNTING LUG
		2	2	2	2	4	4	D2230-3	MOUNTING LUG
8	8							D2274	RADIUS BLOCK
						2	2	D2618	BUSHING
4	4	4	4	4	4			D2732-030	CUSHION
2	2	1	1	1	1	2	2	D2856-400-720	ABRASION STRIP
2	2							D3064-1	CLAMP
1	1							D3079-041	SUPPORT ASSEMBLY
4	4							D3080-1	CLAMP
						2	2	D3235-1	MOUNTING LUG
						1	1	D3278-041	SUPPORT ASSEMBLY
2	2	2	2	2	2	2	2	AN3-35A	BOLT
10	10	2	2	2	2			AN4-11A	BOLT
		4	4	4	4	8	8	AN4-13A	BOLT
						2	2	AN5-36A	BOLT
4	4	4	4	4	4	4	4	AN960JD10	WASHER
20	20	12	12	12	12	16	16	AN960JD416	WASHER
						4	4	AN960JD516	WASHER
2	2	2	2	2	2	2	2	MS21042L3	NUT
10	10	6	6	6	6	8	8	MS21042L4	NUT
						2	2	MS21042L5	NUT
						1	1	*DSI 9410-011	STEP MODIFICATION KIT

*DSI 9410-011 Step Modification Kits are provided with all D350-591-311 and D350-591-312 Steps. This kit is provided as an option for the installer and is therefore **NOT REQUIRED** to complete the installation of the D350-591-311 or D350-591-312 Steps. Refer to Figure 21 for installation of the DSI 9410-011 Kit.

• COPYRIGHT © 1993 BY DART AEROSPACE LTD •
THIS DOCUMENT IS PRIVATE AND CONFIDENTIAL AND IS SUPPLIED ON THE EXPRESS CONDITION THAT IT IS NOT TO BE USED FOR ANY PURPOSE OR COPIED OR COMMUNICATED TO ANY OTHER PERSON WITHOUT WRITTEN PERMISSION FROM DART AEROSPACE LTD.